ALLOWANCE	
UNDER 3	±0.1
3 TO 6	±0.2
6 TO 15	±0.3
15 TO 50	±0.4
50 OVER	±0.5

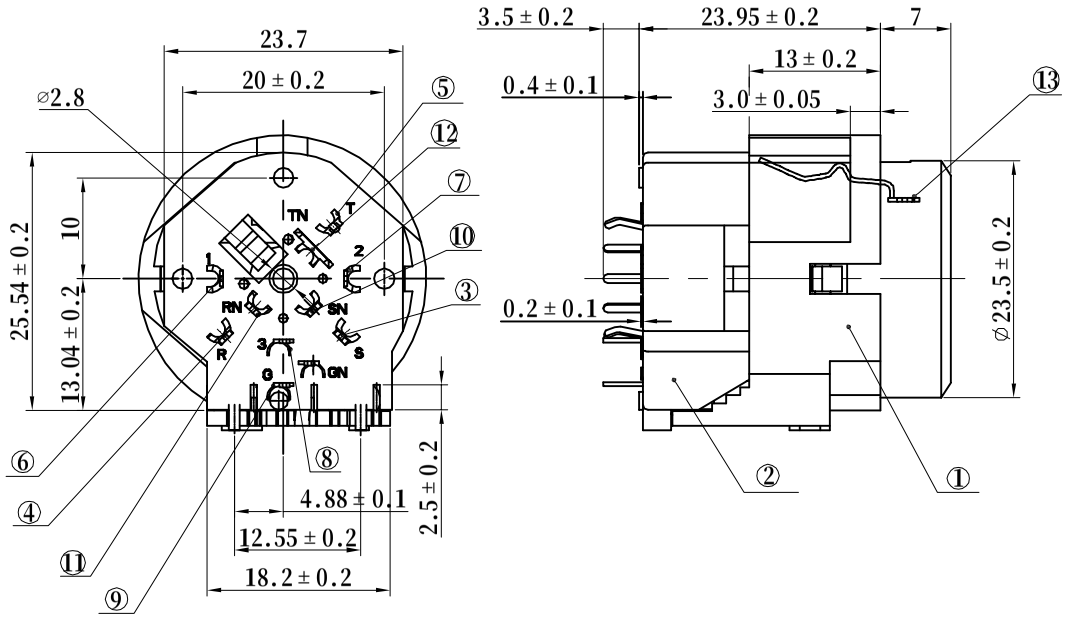

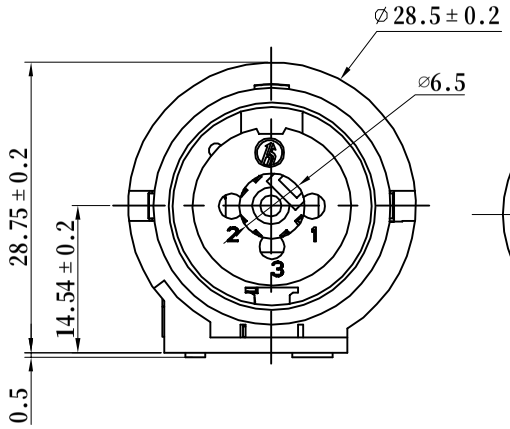

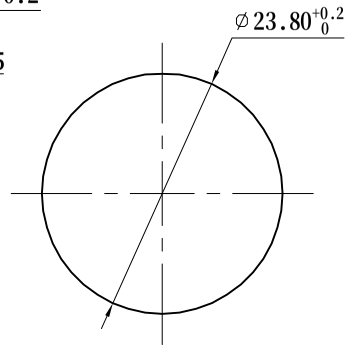

PANEL CUT OUT

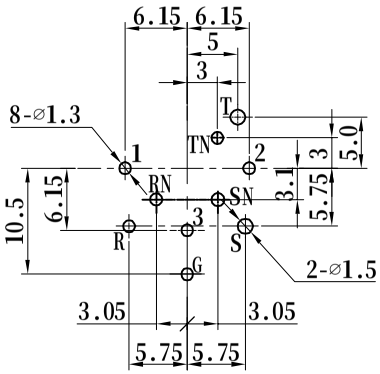

PCB soldering surface

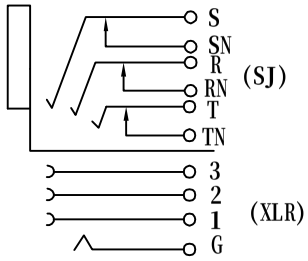

SCHEMTIC

NO:	PART NAME	MATERIAL	QTY	FINISHING
13	RING	65Mn t=0.4	1	Ni PLATED
12	TERMINAL-TN	BRASS t=0.5	1	Au PLATED
11	TERMINAL-RN	BRASS t=0.5	1	Au PLATED
10	TERMINAL-SN	BRASS t=0.5	1	Au PLATED
9	TERMINAL-G	BRONZE t=0.3	1	Ag PLATED
8	TERMINAL-3	BRONZE t=0.4	1	Au PLATED
7	TERMINAL-2	BRONZE t=0.4	1	Au PLATED
6	TERMINAL-1	BRONZE t=0.4	1	Au PLATED
5	TERMINAL-T	BRONZE t=0.5(折弯高度1.0)	1	Ag PLATED
4	TERMINAL-R	BRONZE t=0.5	1	Ag PLATED
3	TERMINAL-S	BRONZE t=0.5(折弯高度1.0)	1	Ag PLATED
2	COVER	PA66	1	BLACK
1	HOUSE	PA66	1	BLACK

MODEL NO :SPC-17D-10P	TOLERANCE: ±0.2	DRAWN BY:
TYPE :SP SOCKET	UNIT: mm	CHECKED BY:
MATERIAL NO :	SCALE: NO SCALE	APPROVED BY:

ZWEE CO.,LIMITED

PDF created with pdfFactory Pro trial version www.pdffactory.com